CAP SCREWS & BOLTS

DIN 6921
Serrated Flange Bolts

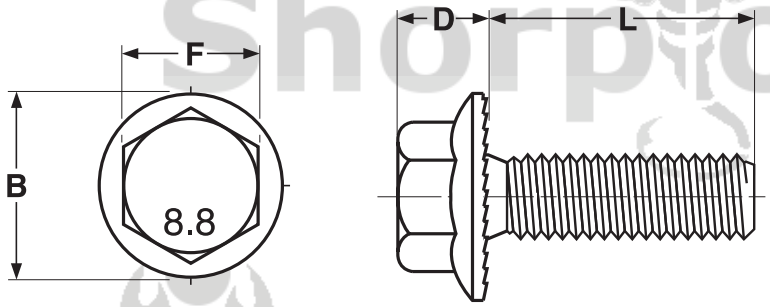

DIN 6921 Serrated Hex Flange Bolts

DIN 6921

Nominal Size	Thread Pitch	F		D	B	
		Width Across Flats		Total Head Height	Flange Diameter	
		Max	Min	Max	Max	Min
M5	0.8	8	7.78	5.4	11.8	-
M6	1	10	9.78	6.6	14.2	12.2
M8	1.25	13	12.73	8.1	18	16.8

Tolerance on Length	12 thru 16mm: ±0.35mm	20mm thru 30mm: ±0.42m	35 thru 50mm: ±0.5 mm
	55 thru 80 mm: ±0.6 mm	90 thru 120 mm: ±0.7 mm	130 thru 180 mm: ±0.8 mm

Description	A one-piece hex washer head bolt with a serrated bearing surface, made of medium carbon steel.	A one-piece hex washer head bolt with a serrated bearing surface, made of corrosion-resistant stainless.
Applications / Advantages	Designed for use in applications where loosening forces, such as vibration, are present. After being installed, the serrations grip to the bearing surface so that significantly greater torque is needed to loosen the fastener than to tighten it. Can eliminate the need for a lockwasher or locknut in certain applications.	For use in applications where corrosion resistance is a greater priority than locking strength. These parts are not hardened so it is important to use only with mating parts of like materials.
Material	*Steel*	*Stainless*
	Class 8.8 carbon steel chemical composition: Carbon- 0.15 - 0.55%; Phosphorous- 0.35% max; Sulphur- 0.35% max	Class A2-70 Stainless
Tempering Temperature	425° C Minimum	-
Tensile Strength	Class 8.8: 800 N/mm^2 min.	700 N / mm^2
Surface Hardness	HR30N 54.0 max.	-
Core Hardness	Class 8.8: Rockwell C22 - 32	-
Proof Stress	Class 8.8: 640 N/mm^2 min.	-
Plating	See Appendix-A for plating information	Stainless screws are usually supplied without a supplemental finish.